Notes:
1) Clean and degrease
2) Remove all burrs
3) Tolerences unless stated:
   Linear ±0.1mm, angular 0.25°
4) Drill and ream
5) Surface texture 1.6

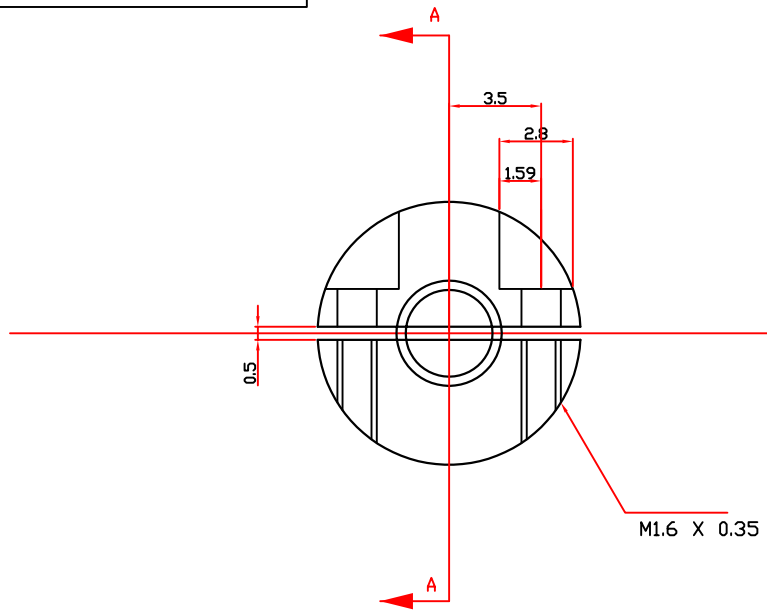

X section A-A

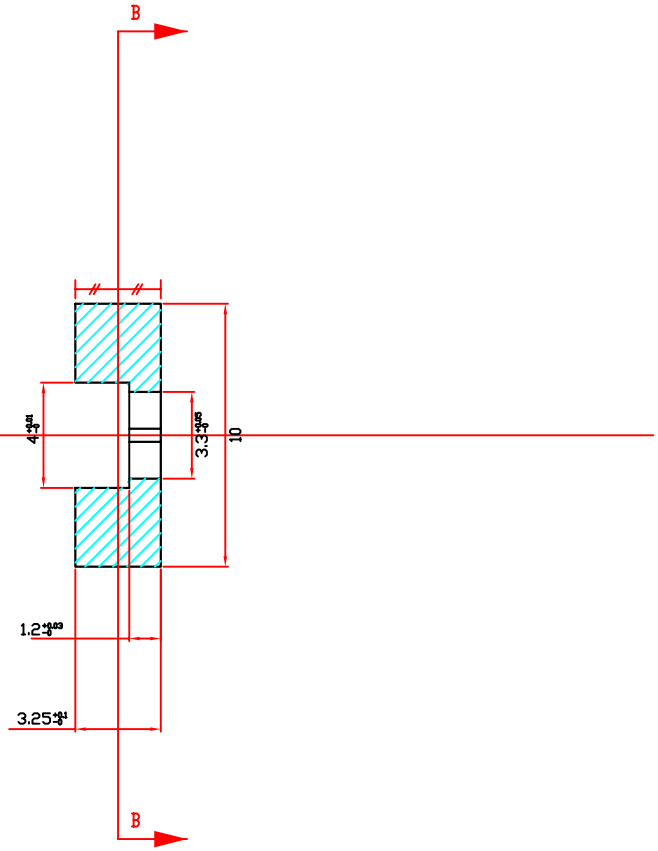

X section B-B
(Hidden details are not shown in this section)

THIRD ANGLE PROJECTION DRAWING PREPARED IN ACCORDANCE TO BS308

GENERAL SURFACE FINISH: µm CLA R_A UNLESS OTHERWISE STATED

DIMENSIONS : mm

MATERIAL
Non-Magnetic Stainless Steel

HEAT & SURFACE TREATMENT

ALL PROPRIETARY RIGHTS IN THE SUBJECT MATTER HEREOF ARE RESERVED BY SHEFFIELD UNIVERSITY AND NO PERMISSION IS GRANTED TO REPRODUCE THIS PRINT IN WHOLE OR IN PART. OR TO DISCLOSE ANY OF THE INFORMATION UPON IT TO OTHERS.

TITLE
MICE TARGET-
MAGNET RETAINING CLAMP

ISSUE	DATE	NOTES	CHK	APP.
	3/10/07	INITIAL ISSUE	MM	RN

UNIVERSITY OF SHEFFIELD
DEPARTMENT OF PHYSICS & ASTRONOMY
SHEFFIELD
S3 7RH
Tel: 0114-2223543

SCALE: 10 : 1
DATE: 3/10/07
DRAWN: M. MOHAMMAD
RAL REF:
DRAWING NUMBER
TD-SU-03
A4